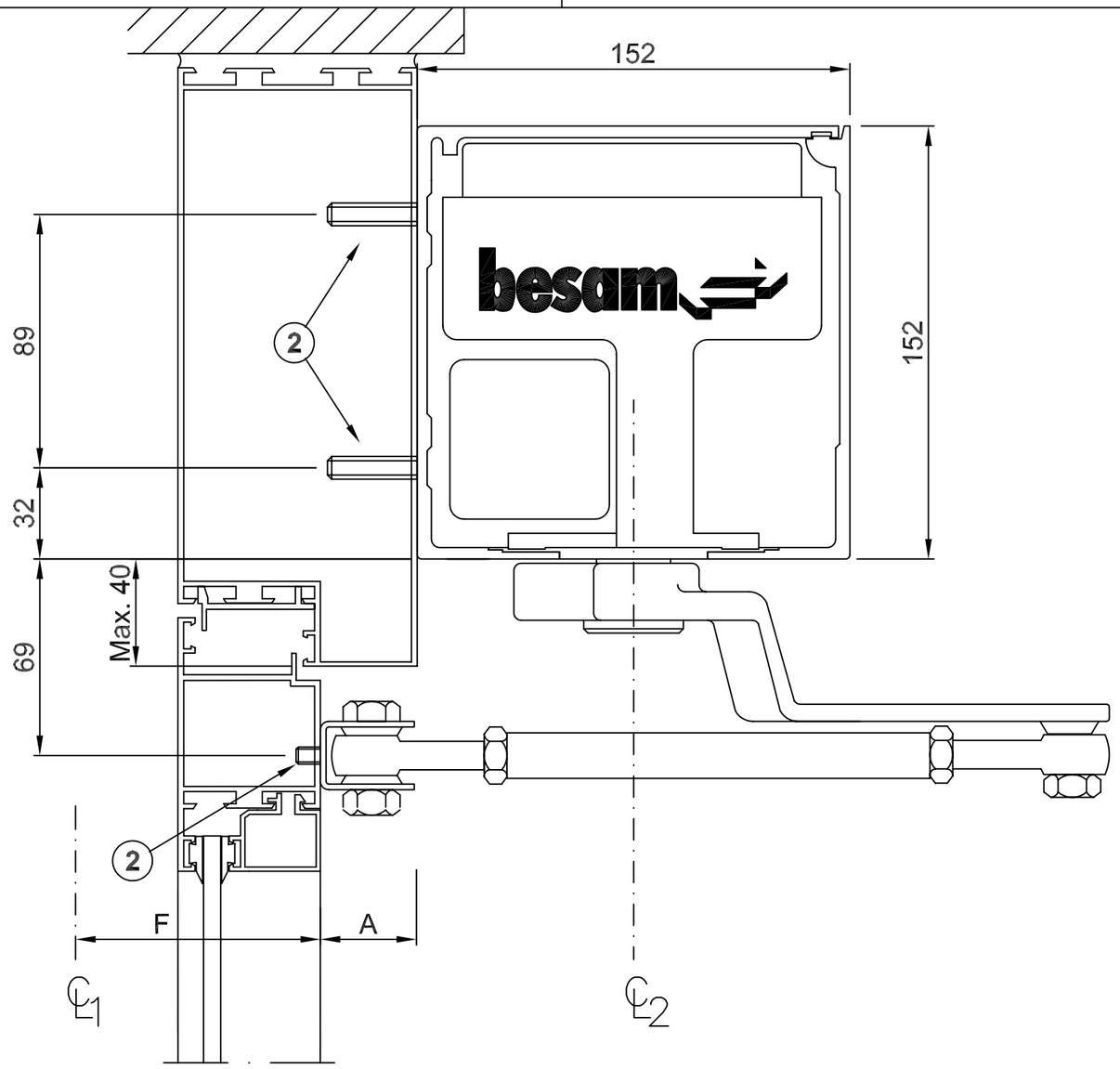

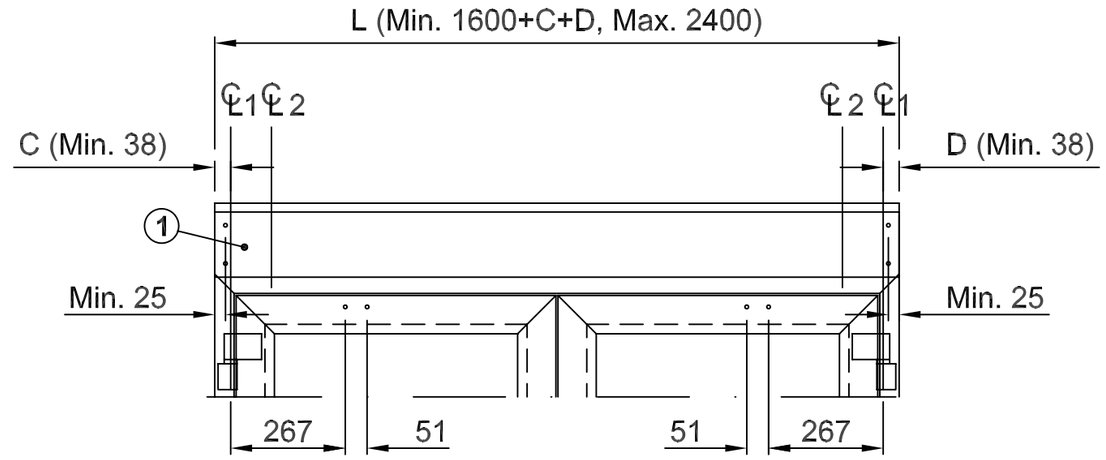

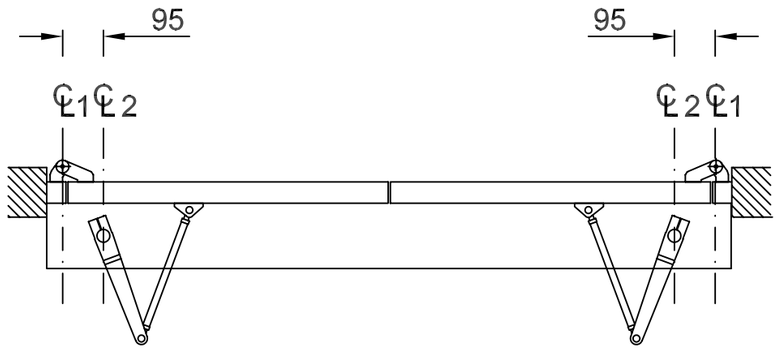

CL1	Hinges
CL2	Operator drive shaft
A	Reveal
F+A	Max. 350mm
1	Fixing holes (4xØ8,5) and holes for cable inlet to be drilled on site
2	Reinforcements required in door leaf and at fixing holes

Note! State L, C and D when ordering

IKS-A 2
Arm system NAS

Swing door operator

besam®

E

173503